VOL. XII, NO. 10 ENGINEERING AND SCIENCE MONTHLY JULY 1949

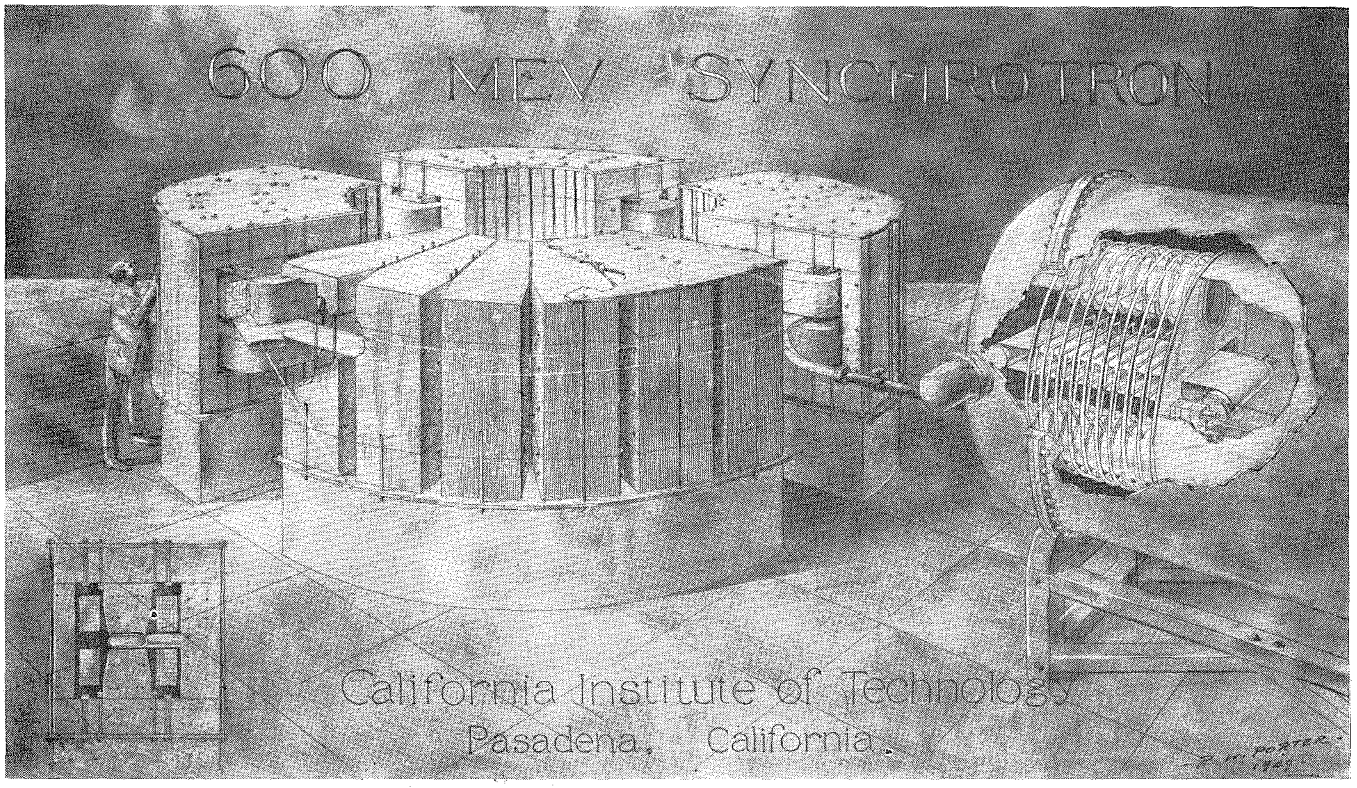

Caltech's proposed synchrotron, drawn by Russell Porter. Present plans call for an energy greater than 600 MEV.

Exploring the Atom

What's a synchrotron got that a cyclotron hasn't got? Are Bevatrons necessary? Here's a sound account of the function and purpose of the mammoth machines known as high energy particle accelerators.

by ROBERT V. LANGMUIR

THE nucleus of an atom was once said to be "a hard little black thing about which we know nothing." A good many of the physicists of the world have spent a good deal of their time trying to remedy this situation. The result of their work is an extensive amount of information about radioactivity, energy levels in nuclei, and other detailed—and rather unrelated—properties of nuclei. But there is still no basic "Theory of the Nucleus." The fundamental law of force between nucleons is not known, and nuclear spectra are not understood in the sense that atomic spectra are now understood in terms of a well-tested theory such as that of modern wave mechanics.

The reason for this unsatisfactory state of affairs can be seen by comparing the state of nuclear physics today with that of atomic physics in the year 1910, just before the successful attack on the mysteries of the atom was begun by the introduction of the Bohr model of the hydrogen atom. At that time atomic spectroscopy was a fairly well organized though largely empirical science. The general construction of atoms—a heavy, charged nucleus surrounded by electrons—was known from the work of Rutherford. The law of force was known to be the simple Coulomb law similar to that controlling charged bodies in electrostatics. What was lacking was a new mechanics governing the motion of charged particles acted on by known forces. This was supplied with great success by Bohr's application of Planck's quantum hypothesis to the problem of the hydrogen atom, and by the later development of modern quantum mechanics.

The situation is reversed in the case of nuclear physics today. We are fairly certain that the mechanics which will be used in a successful nuclear theory will be quantum mechanics; but the laws of force between nucleons (protons and neutrons) are not known. It is now believed that interactions between particles in a nucleus will be explained in terms of mesons—charged particles with a mass intermediate between that of electrons and protons. The existence of mesons was originally predicted on theoretical grounds—by the Japanese physicist Yukawa in 1935—in order to account for the observed nuclear forces. About a year later mesons were observed for the first time in cosmic rays.

There are thus two obvious methods of attack on the basic problems of nuclear physics. One is to develop a nuclear spectroscopy similar to atomic spectroscopy, so that various theories can be compared with experimental evidence. The other is to learn as much as possible about the properties of mesons and their interactions with matter, so as to guide theoretical studies in the most profitable direction. Both methods are being vigorously prosecuted at present. This article is concerned with some of the recent advances in the technique of high energy particle acceleration. One of the main objects of this technique is the creation of mesons in the laboratory—a process which occurs only at energies above 100 million electron volts (MEV). It is hoped that experimental knowledge of mesons produced by high energy machines will lead to a better understanding of some of the fundamental questions of nuclear physics.

OUR knowledge of the nucleus of the atom has come almost solely from the bombardment of nuclei by energetic particles. The bombarding energies needed for nuclear reactions range from a few hundred thousand electron volts up to many millions of electron volts. The earliest experiments were done with alpha particles (helium nuclei), which have energies of several MEV as a result of the decay of natural radioactive materials such as radium. Later, protons were accelerated by means of high voltage transformer-rectifier sets to an energy of about 1 MEV, and were used to investigate nuclear reactions in the lighter nuclei. The modern equivalent of this type of accelerator is the electrostatic generator operating up to 5 MEV, which is used for very accurate measurements of nuclear energy levels.

This is the same type of information as is obtained from atomic spectra, and it leads to what is called nuclear spectroscopy. However, it is much more difficult to investigate one nuclear level than it is to obtain the whole spectrum of an atom giving information about hundreds of electronic energy levels. The practical difficulty of obtaining and controlling high voltages restricts the energies of such accelerators to the region below about 5 MEV.

The necessity of working directly with very high voltages was removed by the development of the cyclotron by E. O. Lawrence in 1932. In this accelerator charged particles are made to travel in a spiral path and to cross an accelerating gap a few hundred times. (Actually the path is a series of semicircles of gradually increasing radius.) The particle is forced to travel in this path by the magnetic field and a small acceleration takes place whenever the charged particle crosses the gap between the "dees," as shown below. If an alternating voltage of constant frequency is applied across the dees, repetitive acceleration will take place if the time taken for a particle to travel through 180° of its spiral path is a constant independent of the radius of the spiral path. This is approximately the case, for it can be shown that the angular velocity, ω, of a particle of charge e and mass m in a magnetic field B is

$$\omega = \frac{eB}{m}$$

Thus if e, B, and m remain constant and if the frequency of the alternating voltage across the dees is $\omega/2\pi$, the particle may be said to be in resonance with the dee voltage and successful acceleration can take place.

NORMAL CYCLOTRON (PROTON ACCELERATOR)

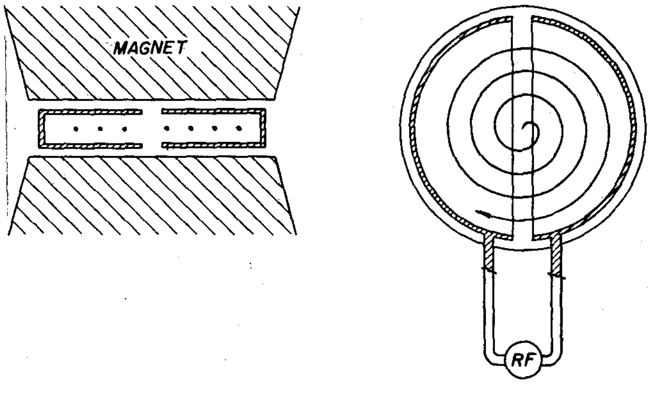

Spiral curve in this diagram represents path of an accelerated proton. Each half of the split pillbox in which acceleration takes place is called a "dee."

In the 1930's this was the basis for the construction of a large number of cyclotrons operating at energies up to 10 or 15 MEV. However, when cyclotrons were designed for higher energies, it proved to be very difficult to keep the charged particles in resonance with the accelerating voltage without going to extremely high dee voltage. This is explained by the theory of special relativity, which shows that if the energy of a particle is increased, its mass also increases. For a proton, the relation is such that the mass of a proton is doubled when its energy is 937 MEV.

This has serious consequences for the operation of high energy cyclotrons, for a proton of 50 MEV has a mass five per cent larger than its mass at lower energies and, by equation (above), a resonant frequency which differs by five per cent from its resonant frequency at low energies. Thus a 50 MEV proton in a cyclotron will tend to drift out of resonance with the accelerating voltage in a few revolutions and will not be accelerated. A possible solution to this problem is to have very high dee voltage so that the acceleration is over in a few revolutions of the particle in the cyclotron, though this calls for extremely high power oscillators to supply the dee voltage. Thus, before the war, cyclotrons seemed to have reached an upper energy limit of about 50 MEV, and larger machines seemed impractical.

High energy protons and other heavy particles are not the only agents which will cause nuclear reactions. High energy electrons and X-rays can also interact with the nucleus, though such reactions do not occur as easily. Just before the war D. W. Kerst successfully constructed an electron accelerator called a betatron. The principle

BETATRON (ELECTRON ACCELERATOR)

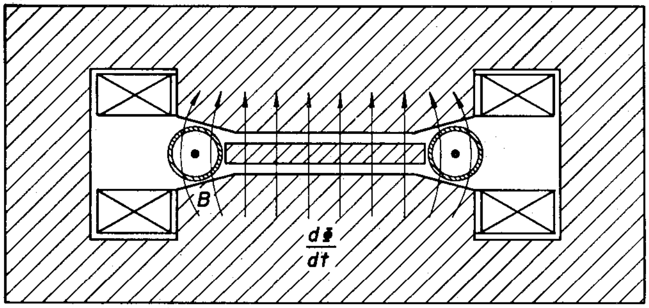

Schematic diagram of the operation of a betatron. Shaded areas shown above consist of laminated iron.

of this machine (see above) is quite similar to that of a transformer. The electrons circulate in an evacuated doughnut-shaped glass tube, which is placed in a ring-shaped magnetic field varying at a 60 cycle rate. Every time an electron goes around its orbit once it picks up some energy from the changing magnetic flux which passes through its orbit. By placing a single turn of wire at the orbit position, a voltage V is induced in the wire by the changing magnetic field through the loop of wire. Every time an electron makes a revolution its energy is increased by V electron volts. The electron orbit is, in effect, the secondary of a transformer. The ratio of the rate of change of the flux through the orbit to the magnetic field at the orbit is so arranged that the orbit radius is independent of the energy of the electrons. Thus the magnetic field needed to bend the electrons in a circular orbit does not extend over a large volume and the energy stored in the guiding magnetic field is kept to a minimum.

As the electron rapidly reaches velocities close to that of light, its rate of energy increase is quite large. The electrons are accelerated in this fashion from about 50,000 electron volts up to as much as 100 MEV. By pulsing the magnetic field when the electrons are at maximum energy, they can be made to strike a tungsten target and produce high energy X-rays. It is usually these X-rays that are used to cause nuclear reactions.

A large number of these machines are in successful operation at energies below 100 MEV. However, as in the cyclotron, when higher energies are desired, new difficulties arise. Whenever a charged particle is accelerated it radiates energy. The acceleration in this case is centripetal. When the electrons are forced to travel in a circle at very high energy, they lose energy in the form of electromagnetic radiation. This loss of energy causes the electron orbit to shrink and strike the inner walls of the vacuum tube containing the orbit. The physics of the problem is such that this is not important for heavy particles, but becomes of great importance for electrons of over 100 MEV, and—since the effect increases as the cube of the electron energy—it is the limiting factor in the construction of high energy betatrons.

When the need for a new invention arises, the required invention is often made independently by several people. This was the case in the solution of the difficulties in extending the range of high energy accelerators. Independently, and at about the same time, the principle of phase stability was discovered by V. Veksler in Russia and by E. M. McMillan at the University of California.

The principle of phase stability is demonstrated in the diagram below. Consider a charged particle rotating in a magnetic field at constant energy. Once every revolution the particle crosses an accelerating gap across which is impressed an alternating voltage, and on crossing the gap the particle picks up or loses an amount of energy which depends on the phase of the accelerating voltage at that time. In the diagram below the points marked *1* show a particle crossing the gap when the voltage at the gap is just changing from accelerating to decelerating. If the time required for one revolution of the particle in its orbit is equal to the period of the gap voltage, the particle will always cross the gap when the gap voltage is zero.

The important question now is whether such a motion is stable or not. Points marked *2* in the diagram show the motion of a particle which initially has a slightly higher energy than that of the resonant particle. Since this particle has a higher energy, it will traverse a slightly larger orbit and will take longer to make one revolution than the first particle. Thus it will cross the gap at a slightly later time than the resonant particle and so will be decelerated and have its energy reduced. It can be shown that such a particle will execute slow oscillations about a phase angle of 180° on successive transits through the gap. The motion is thus stable and this particle is said to be locked in synchronism with the alternating voltage at the gap.

The application of this principle of phase stability to accelerators lies in the use of the adiabatic principle, which states that when slow changes are made in the external conditions, the particle will tend to stay in synchronism with the driving voltage, and if this requires the particle to gain energy by always crossing the gap at a time such that it is accelerated, the particle will do so. In this case "changing the eternal conditions" means slowly changing the magnetic field, the frequency of the gap voltage, or both. These three possibilities lead respectively to three new types of accelerators, the synchroton, the synchro-cyclotron or FM cyclotron, and the proton synchrotron or Bevatron.

The synchrotron is an electron accelerator which uses a constant frequency accelerating voltage and a slowly changing magnetic field at the orbit of the particle. Since operation is desired at an approximately constant orbit radius, the particle must have a relatively constant velocity during the synchrotron acceleration. This means that the velocity of the particle must be close to that of light at all times, for the theory of relativity tells us that particle velocities can never exceed that of light, no matter how great the particle energy. For electrons

PHASE STABILITY

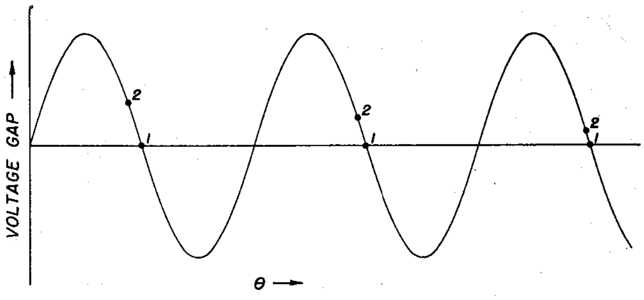

Plot of the accelerating voltage showing operation of the principle of phase stability which is responsible for extending the range of high energy accelerators.

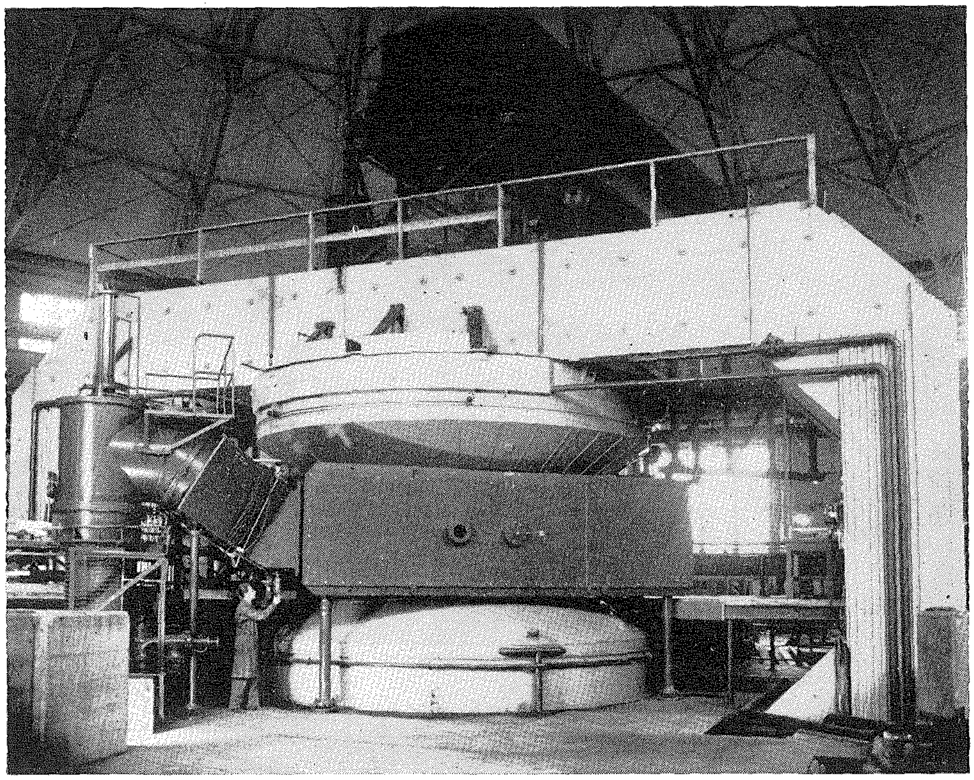

University of California's cyclotron, the largest and most powerful atom-smasher in the world, fires protons of 350 million electron volts.

this means that synchrotron acceleration must start at an electron energy above about 1 MEV. The radiation of electromagnetic energy by the electron during its acceleration is of little importance in this type of accelerator, for it is merely another of the "external conditions" mentioned above. If the electron needs more energy to stay in synchronism with the gap voltage, either because the magnetic field changes or because it has radiated some energy away while traversing the orbit, it will obtain this energy by crossing the gap at a suitable time and so remain in synchronism. The electromagnetic radiation is emitted in the form of visible light, and can be seen in synchrotrons and betatrons operating above 30 MEV. Electron synchrotrons have been operated at energies of 300 MEV and can be designed for operation at energies as high as one billion electron volts (1 BEV).

The application of the principle of phase stability to cyclotrons has led to the synchro-cyclotron or, as it is sometimes called, the frequency modulated cyclotron. This is a heavy particle accelerator and differs from an ordinary cyclotron in that the frequency of the dee voltage is slowly changed during the acceleration period. The magnetic field remains constant. The principle of phase stability says that the particle will remain in synchronism even though the frequency is slowly changed. The equation on page 4 shows that if the frequency is slowly lowered, the particle can remain in synchronism only if it increases its mass. This of course means that the particle must gain energy. The large synchro-cyclotron at Berkeley has accelerated protons up to energies of about 400 MEV and has opened up the extremely interesting field of high energy nuclear physics. Mesons were first produced in the laboratory with this machine.

The principle of phase stability permits the design of extremely high energy machines. Construction of cyclotrons in the billion volt region is not feasible because of the large volume of magnetic field which is needed, and the consequent high cost of the magnet. Electron synchrotrons above 1 BEV are not practical because of the energy loss caused by radiation which must be supplied by the oscillator driving the accelerating gap. Thus a very high energy machine should accelerate protons, which do not have radiation troubles, but should also have an orbit of constant radius, rather than the spiral orbit of the cyclotron. Such a machine is called a proton synchrotron or Bevatron (so called because it operates in the energy region of several BEV). These gigantic machines accelerate protons by varying both the frequency of the oscillator and the magnitude of the magnetic field at the orbit in such a fashion as to accelerate the protons and at the same time keep the orbit radius constant. Proton energies between 1 and 10 BEV are expected. Two such machines are now under construction in this country, one in Birmingham, England. It is not known what types of nuclear reactions will occur at these extremely high energies; this of course is the main reason for constructing such large accelerators.

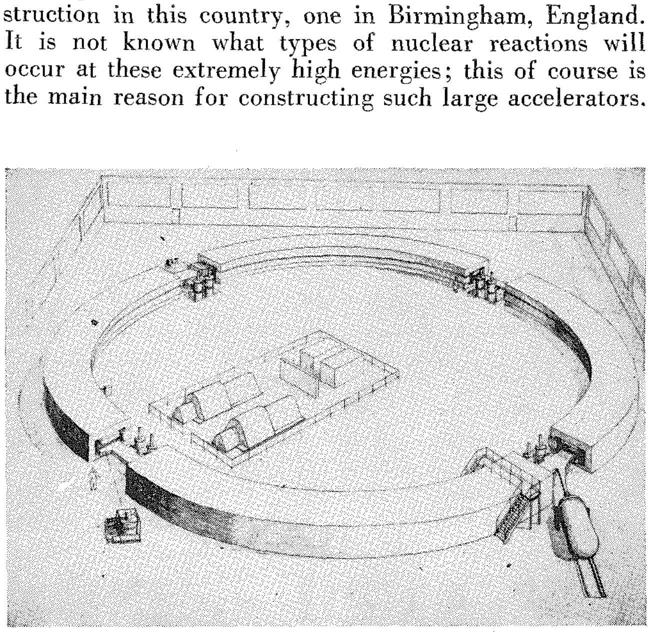

Artist's conception of the University of California's Bevatron, designed to accelerate protons to 10 BEV.